W0500059

RAYSHAPE

www.rayshape3d.com

in | | | | |

sales.os@rayshape3d.com

Contact the sales team for more information

Edge Series

User Manual V1.0

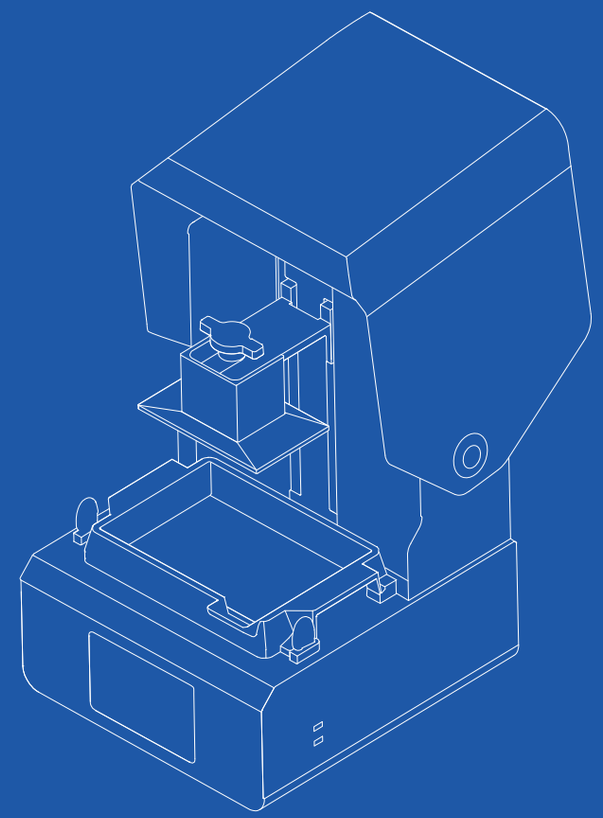

RAYSHAPE

Contents

General Information **2**

Information 3

Safety Guidelines 4

Product Information **6**

Technical Specification 7

Technical Principle 8

Installation and Debugging **9**

Installation Requirement 10

Packing List 11

Equipment 13

Installation and Connection 14

Printing **17**

Print Operation 18

Post-Processing **20**

Maintenance **24**

Troubleshooting **26**

Service **28**

Warranty 29

Technical Support 30

Contact 31

Warranty Card 32

FCC WARNING 33

General Information

· Information

· Safety Guidelines

Instructions

This manual contains the technical information, safety guidelines, and detailed operation instructions for Edge series LCD 3D printers. Please keep it properly.

Please read this manual carefully before using the printer. Failure to comply with the safety and operating instructions required by this manual will result in consequences that are the sole responsibility of the user.

All information contained in this manual is up to date at the time of printing, but may be subject to change without notice as products are upgraded.

The images used in this manual may differ from your printer due to differences in specific models and specifications.

If you have any improvement or modification opinions on this document and the product, or If there is any error, please inform us in time. Thank you for your valuable comments on our products.

©2024 Suzhou Laisai Technology Co., Ltd. All rights reserved. No part or all of this manual may be reproduced or copied without written permission.

Instructions of mark

Warning : Could result in serious personal injury or equipment damage if it was failed to comply with this requirement.

Attention : Could result in minor personal injury or equipment damage if it was failed to comply with this requirement.

Important Information: The normal operation of the device or the quality of printed models would be influenced if it was failed to comply with this requirement .

Protection requirements: Corresponding precautions should be taken as required.

Hazard indication: Description of specified hazard.

Safety Guidelines

Before operating with the printer, please read the following safety guidelines to identify the potential risks which you may experience during the usage. When using the printer, make sure to comply with the related requirement defined in the manual already and take appropriate precautions in advance.

Any operation which was failed to fulfill with the requirement defined in the safety guidelines may result in personal injury or equipment damage, and the corresponding consequences should be taken by the users.

The device shall be operated by professional staff

Operators must carefully read and understand the safety guide and operation manual, then operate the device correctly as required.

Keep away from children

Please keep the device, resin material and other accessories out of the reach of children.

Disassembly or modification is strictly prohibited

It is strictly prohibited to disassemble or modify the device without authorization. Do not use accessories which are not designated by RAYSHAPE officially.

Risk of electric shock

- The specification of power must meet the operating requirements of the device.
- A grounded electrical outlet should be applied.
- A grounded electrical outlet should be applied.
  Replaced with a new one before usage if it was found that the power cable was aging or damaged.

Risk of UV exposure

Both the printer and post-curing device were designed based on the principle of UV light curing and there is UV light available inside the device during operation, the risk of UV exposure shall be avoided accordingly.

- When the printer and post-curing device are working, please keep protective cover/ door closed normally.
- If any operation or maintenance work should be proceeded while the printer is working, the anti-UV goggles shall be worn accordingly.

Risk of mechanical extrusion

The printing platform will move up and down while the printer is working, there is a risk of mechanical extrusion which was generated by the improper operation.

- Please keep the protective cover/door closed normally when the printer is in service.
- It is strictly forbidden to put hands or other parts of the body into the printing area during the printing.

Risk of sharp edge cutting

After printing, a shovel blade is used to separate printed models from the printing platform. There is a risk of getting injured by the sharp edge cutting of the shovel blade.

- Cut-resistant gloves should be worn during the operation of separating printed parts from the platform.
- The blade of the shovel should not be orientated to your body during usage.

Risk of flammability of cleaning solvent

The printed parts should be cleaned with a cleaning solvent, such as IPA or 95% alcohol.

- Please keep good ventilatlon and keep away from heat and fire sources when storing or using cleaning solvent.

Wear protective gloves

- Please wear disposable medical gloves when operating the devices to avoid direct contact with the resin material.
- Please wear cut-resistant gloves when separating the printed models from printing platform with a shovel.

Wear goggles

- If any operation or maintenance work is needed to proceed while the printer is working, anti-UV goggles should be worn accordingly.
- Goggles should be worn to avoid the injury caused by the splashing fragment which was generated by the operation of separating printed parts from the printing platform.

Good ventilation

- Areas for printer installation and post-processing should be well ventilated.

Product Information

· Technical Specification

· Technical Principle

Technical Specification

Main Parameters	Edge E2	Edge S2
Build Volume	192 × 120 × 190 mm	192 × 120 × 190 mm
Pixel Size	34.4 μm	34.4 μm
Technology	LCD Technology	LCD Technology
Layer Thickness	0.05 ~ 0.1 mm	0.025 ~ 0.3 mm
Printing Speed	Up to 85 mm / 1 hour (Depending on the resin type and slicing settings)	Up to 60 mm / 1 hour (Depending on the resin type and slicing settings)
Materials		
Available materials	ShapeMaterials Dental Series	ShapeMaterials Basic, Functional, Advanced Series
Hardware		
LCD Screen	9.25" 6K monochrome screen	
Light Source	405 nm LED	
Resolution	5760 × 3600 pixels	
Door control	Printing will be paused automatically if the cover is opened (optional)	
Heating module	Automatic heating build platform	
Touch Screen	7" color touchscreen	
Connectivity	USB2.0, Wireless network, Ethernet	
Input Voltage	100~120 VAC, 4 A, 50/60 Hz 200~240 VAC, 2 A, 50/60 Hz	
Rated Power	350 W	
Software		
Control System	Self-developed Master O.S.	
Language	Chinese, English	
Slicing Software	ShapePanel	
Operating System	Windows 7/8/10/11	
File format (Input)	.stl, .obj	
File format (Output)	.rs, .shape	
Advanced Functions	Support editing, automatic repair, model cutting, hollowing, perforating, labeling	
Network printing	Deliver printing tasks to specified printer in LAN environment via "One Click" operation	
Cluster Management	Manage the printing tasks of multiple devices in LAN environment	
Size & Weight		
Device Dimensions	390 × 420 × 550 mm	
Device Net Weight	31 kg	
Packaging Size	540 × 540 × 900 mm	
Packaging Weight	45 kg	

Technical Principle

Principle of LCD photocuring 3D printing technology

The core mechanism of light curing 3D printing technology is the light-curing chemical reaction that photosensitive resin will undergo light-curing reaction and instantly change from liquid to solid when it encounters 405 nm blue light.

Edge series 3D printer uses the mature monochrome LCD technology to make the reaction process controllable.

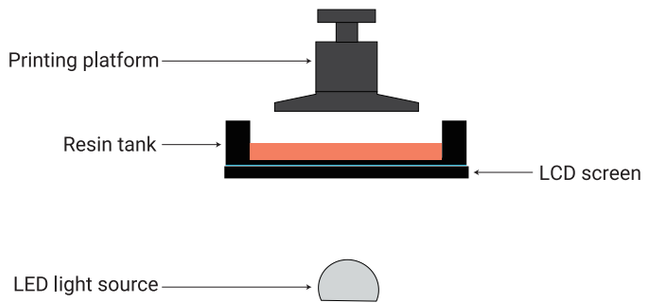

Step 1: ShapePanel 3D printing software will process the STL file you need to print into a slicing file.

Step 2: Additive manufacturing: the above figure is the structural schematic diagram of Edge series 3D printer. The resin tank contains photosensitive resin. In the first stage of printing, the printing platform that can move up and down on the Z axis is close to the bottom of the resin tank. The LCD screen projects a slice image of the model to be printed. The image is imaged at the bottom of the resin tank and bonded to the printing platform. After one layer is cured, the printing platform in the second stage is lifted up to a certain height, Separate the printed first layer from the bottom. In this cycle, press it down to a certain distance from the bottom, and then the LCD screen projection solidifies the next layer until all the slices are printed.

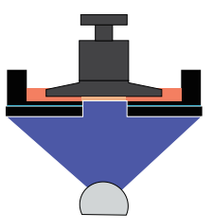

Stage 1: Printing platform descends and LED on

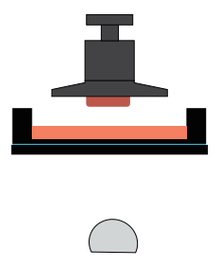

Stage 2: Printing platform rises and separates from the bottom

Installation and Debugging

- Intallation Requirement
- Packing List
- Equipment
- Installation and Connection

Installation requirement

In order to obtain the best printing quality, stability and safety, before the installation and use of the Edge series 3D printer, please be sure to understand the best service environment of the device, and the requirements are described as follows:

Electrical requirements

·Rated voltage: 100~120 VAC, 4 A, 50/60 Hz 200~240 VAC, 2 A, 50/60 Hz
(Before using, please confirm the power requirements on the nameplate and use the power that meets the requirements.)

·Rated power: 350 W

·The power plug is a two-pole grounded plug, and the device shall be reliably grounded.

Operating ambient temperature, humidity, ventilation, and light

The best operating ambient temperature of Edge series 3D printer is 25±5 °C, the humidity is below 60%, the environment shall be well ventilated (non-confined space), and the device installation location shall avoid direct sunlight.

Note: The temperature and humidity requirements of resins shoud also be considered for printing.

No dust pollution

Edge series 3D printer contains precision optical components inside the machine body, so the user should ensure that there is no dust pollution in the service environment, otherwise it will affect the normal operation of the optical devices.

Level and stable platform, away from fire, heat and vibration sources

A level and stable platform is required for Edge series, away from fire, heat and vibration sources.

Keep the cover closed during printing

During the printing process, please try not to open the cover for a long time, so as to avoid the drastic change of the resin temperature due to the fluctuation of the temperature inside the printer case, which affects the stability of the light-curing chemical reaction, causing printing failure or poor printing quality.

Use official materials

All official RAYSHAPE materials have been extensively tested and optimized for superior performance, and we can not guarantee that you can get the same or similar printing performance when using non-designated materials.
Please note that you are responsible for the loss of printing performance or printer damage caused by the use of non-designated materials.

Ensure the speed and stability of wireless network

If your device is connected to the router via a wireless network, we recommend that you place the wireless router and your Edge series 3D printer as close as possible to ensure high signal strength and data transmission speed. The router should not be blocked by walls.

Note: Connect your printer to the local network with an Ethernet cable to ensure the best data transmission speed and network connection stability. Make sure to connect your slicing computer and printer to the same router to enable data network transmission function.

Packing List

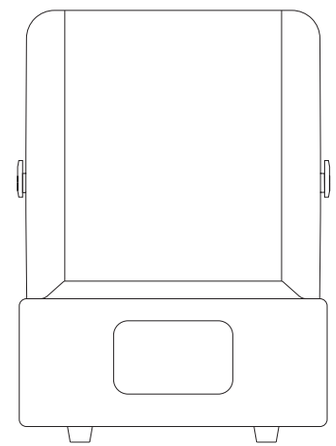

1

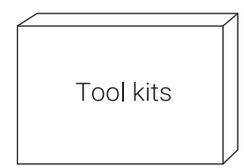

2

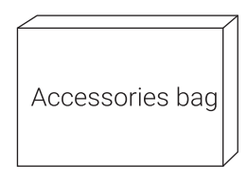

3

Packing List

No.	List	Quantity
1	Edge series 3D printer	1
2	Tool kits	1
3	Accessories bag	1

⚠ The weight of the whole package is about 45 kg, and it needs two people to operate at the same time when handling.

Packing List

Tool kits

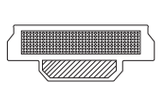
Resin vat filter

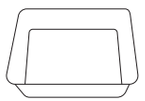
Plastic box-big

Plastic box-small

Spray bottle

Disposable gloves

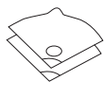
Disposable filter

Dust-free wipes

Plastic nippers

Shovel blade

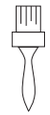
Brush

Allen wrench

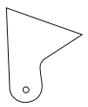
Scraper

Ethernet cable

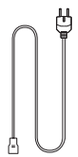
Power cable

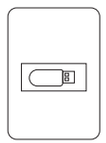
USB driver

Accessories bag

Screen protector

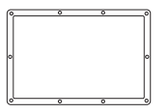
Release film

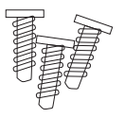
Spare screws

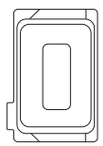
Resin tank cover

Pictures above are a demo for tools and accessories packed with the printer.
The actual type or quantity of these items may be adjusted without notification.

Equipment

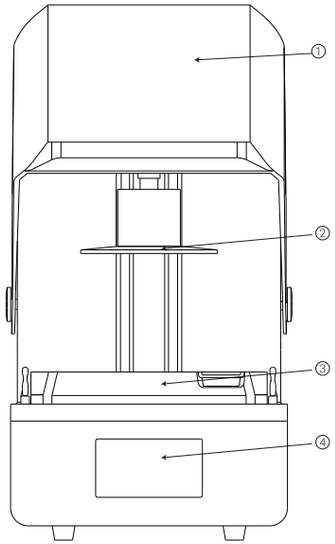

Front

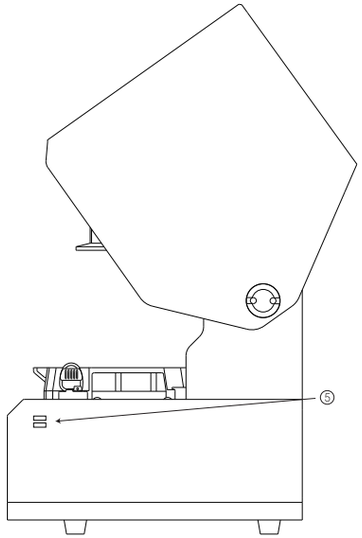

Right

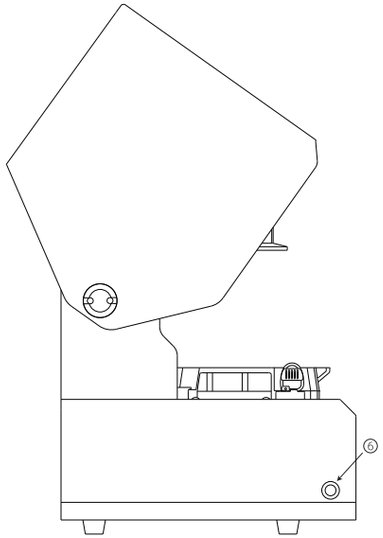

Left

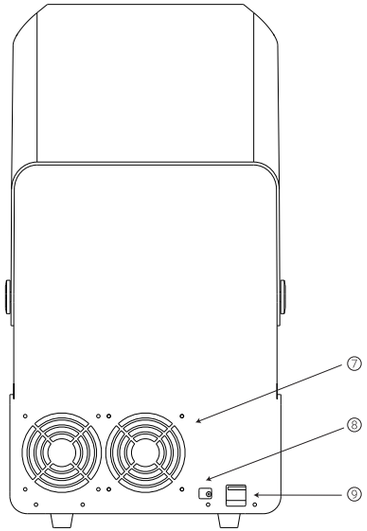

Behind

No.	Item
①	Cover
②	Printing platform
③	Resin tank
④	Touch screen
⑤	USB port
⑥	Power switch
⑦	Heat emission hole
⑧	Ethernet interface
⑨	Power interface

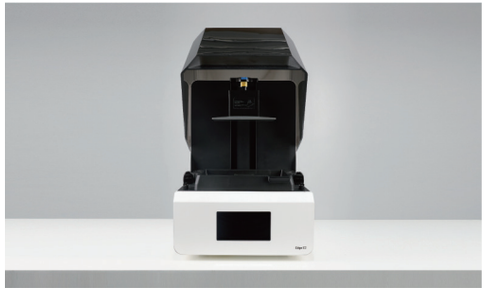

Platform

The platform which is used to place the device shall be more than 50 cm in width, more than 65 cm in depth, and there shall be more than 80 cm space above. The load-bearing capacity shall be more than 50 kg. The back of the device should be kept at a distance of more than 20cm from the wall to make sure that the cover could be fully opened. The table should be flat and stable, and avoid direct sunlight to the printer.

The installation environment shall meet the requirements of the manual, otherwise it may lead to low printing success rate and print quality problems.

Connection

（1）Connection of the power cord

The power interface is located on the back of the device.

Make sure that a grounded power outlet was applied.

（2）On/off

After connecting to the power supply, click the start button and the indicator light will turn on; click again and the indicator light will turn off.

（3）Connection of Network

① Wi-Fi

Operate on the touch screen by “Setting-Network-Wireless” to connect with a wireless network.

②Ethernet cable

Please connect one end of the network cable to the Ethernet port located on the rear surface of the device and the other end to the Ethernet port on site.

The computer which was used to prepare the printing task with ShapePanel and the corresponding printer must be placed within the same LAN In order to achieve the wireless delivery of the printing task. Whether the LAN is connected to the external network does not affect network transmission.

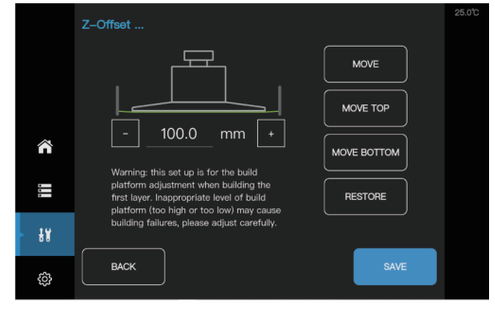

Initialize platform

（1）Click on " TOOLS"-"Z-AXIS OFFSET "-"MOVE TO TOP". The printing platform will move up to the initial position of the z-axis.

（2）Remove protection foam from the resin tank.

Remove /Install printing platform

（1）Install

Please align the printing platform with the cantilever bayonet and slide inward horizontally to the end when the platform is installed.
Hold the printing platform with one hand and rotate the hand wheel clockwise with the other hand until the blue sign faces to operator.

It was recommended to tighten the rotation wheel until the printing platform did not wobble any more.

（2）Remove

Please hold the printing platform with one hand and rotate the hand wheel counterclockwise with the other hand until the blue sign is back to the operator to make the platform separate from the bayonet, then take away the platform outward.

Installation and Connection

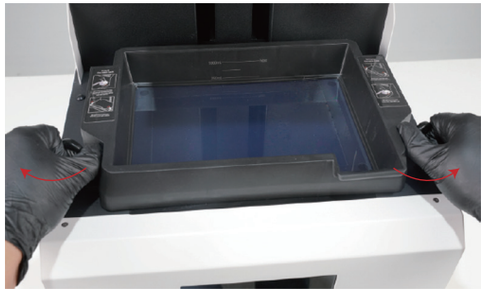

Remove resin tank

Release knobs on both sides of the resin tank outwards.

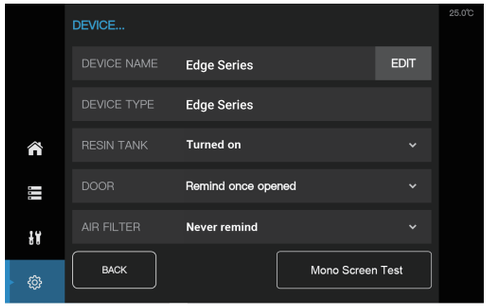

Screen test

Place a piece of A4 paper on the screen, close the cover, click "Mono Screen Test", the screen will project a square array, Check if the projected image is clear and stable.

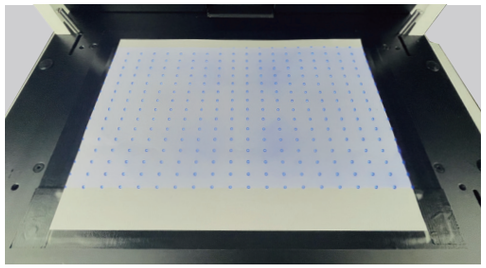

Printing

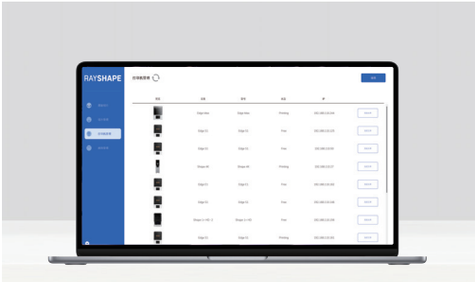

Slicing File Preparation

Prepare slicing file in ShapePanel software, and transfer it to the Printer by USB driver, Wireless or Ethernet network.

Printing file load

① Select a printing task in the historical list
② Printing tasks were delivered from ShapePanel
③ Read the printing file in the USB drive

Confirm the information of the printing task

Check with the printing platform

① The surface of the printing platform should be clean and free of foreign matter.
② Make sure the printing platform to be installed in a correct and reliable way.

After a long term usage, there may be pits or scratches on the surface of the platform which will not influence the quality of the printing. But convex on the surface of the platform is not allowed to avoid the risk of damage to the release film.

Check with the resin tank

Do a visual check that whether the release film is damaged and any foreign matter is available in the resin tank if it is an empty one. If there is residual resin available in the tank, use the plastic scraper to scrape the bottom of the resin tank slightly to check whether the release film is damaged, and mix the resin evenly in the meanwhile.

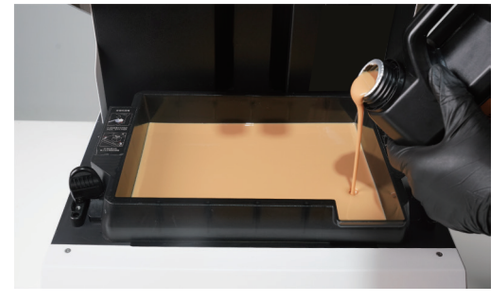

Add resin

Make a judgement whether it is necessary to add resin according to the remaining amount in the resin tank and the consumption of next printing task.The bottle which is containing the resin material should be shaken up and down adequately just before pouring the resin material into the resin tank.

The liquid level of the resin should be kept between lines " min" and "max".

The bubble generated by shaking does not affect the print quality.

Contacting with resin directly may lead to skin irritation, please wear disposable gloves.

If you eat the resin by mistake, please seek for medical care immediately.

Print

Click the "PRINT" button to initiate the task, then wait for completion of printing.

Post Processing

Preparation

Post-processing work will lead to resin dripping, and waste liquid or waste residues would be generated accordingly also, then pollution prevention should be considered during the preparation.
Item should be prepared: Disposable glove, spray bottle, brush, shovel blade, hammer, tray, plastic box (It is recommended to equip with ShapeWash washing unit).

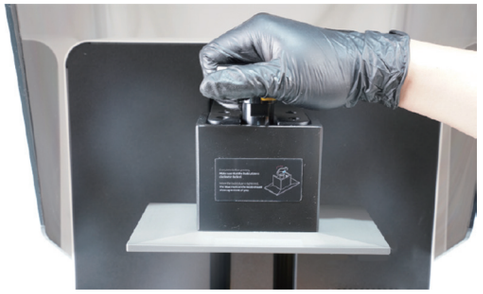

Remove the printing platform

Rotate counterclockwise to release the handle, and pull outward to remove printing platform.

Clean the resin tank

① Click "Clean resin tank". After curing, please shovel the cured layer of resin along the edge of the resin tank with the plastic scraper until it was separated at the corner.

② Tear down the whole layer of resin with your hands by wearing the disposal gloves and discard afterward.

⚠ Contacting with resin directly may lead to skin irritation, please wear disposable gloves.

⚠ Operate the scraper as parallel to the firm as possible to avoid damage to the firm.

③ Cover the resin tank with lid if the resin material is needed to be stored within the tank temporarily.

Please take resin material out of the tank if it will be not consumed in 3 days, make sure to get it filtered before storing them in a light-proof container. It was not recommended to mix it with the original one directly.

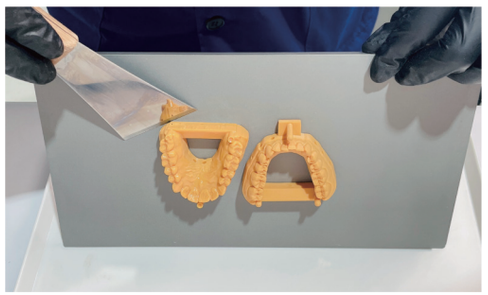

Shovel printed parts

Please use the shovel blade to shovel the printed parts off from the printing platform. Place the blade as parallel as possible to the platform to avoid scratching.

Be sure to wear anti-cutting gloves, and the blade of the shovel should be not orientated to the body of the user during the operation.

Clean printed parts

Preparation: Please fill the spray bottle with IPA or 95% alcohol. Brush the model in the cleaning tank for preliminary cleaning.

In order to obtain a better effect of cleaning, it is recommended to conduct the ultrasonic washing with cleaning solvent twice, and 1-2 minutes was needed every time. Clean solvent should be used for the second washing

After the preliminary cleaning, please spray cleaning solvent on the model. After cleaning, the surface of the model is dry and free of sticky hands.

Clean the printing platform

After the printed parts are removed, use tissue to clean the surface of the platform.

If the type of resin material will change in the next task, the printing platform shall be cleaned with cleaning solvent carefully to remove residual resin.

Maintenance

Maintenance

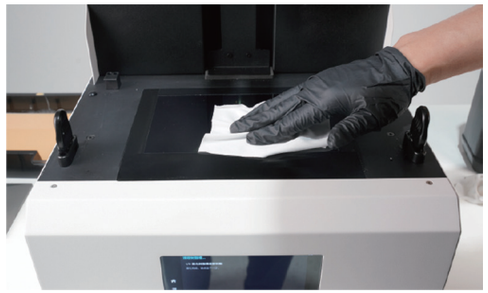

Clean light path

LCD 3D printer is a precision optical device, and the light path shall be kept clean to avoid reduction on printing accuracy and quality. The optical path, which is composed of the screen and the release film, shall be cleaned regularly. Do the cleaning work with dust-free wipes, or absolute ethanol in case it is necessary.

It is strictly forbidden to use paper towels to wipe directly, as it may cause scratches.

Change the resin

If you only have one resin tank, and need to change the resin material:

① Firstly you need to empty the resin tank by pouring the current resin material into a light-proof container for temporary storage.
② Clean the resin tank thoroughly with cleaning solven, and then pour new resin into it afterward.
③ At the same time, clean the printing platform with solvent carefully.

If you need to change resin material frequently, it is recommended to equip with multiple resin tanks:

① Remove the current resin tank and place it on a clean and flat surface, such as on top of a resin tank lid or a piece of clean A4 paper.Then cover it with a resin tank lid.

The resin should be taken away from the resin tank, and filtered just before storing in a light-proof container if it will not be consumed in 3 days. Do not mix it with the original resin directly.

② Clean the printing platform with cleaning solvent carefully in the meanwhile.

Maintenance work in case the printing part falls off during printing

In case of such problems as part falling off (the printing part falls off from the printing platform) and delamination (the layers of the part fall off or separate from each other) during the printing process, please make sure to drain all the remaining resin out of the resin tank and clean away the residue in the tank, get the resin filtered just before pour it back.

Troubleshooting

Troubleshooting

Description	Reason	Solution
The device cannot start up normally	The socket does not have normal power supply	Check whether the socket is working normally.
	The cable is not plugged in or becomes loose	Re-plug the cable and confirm the connection is reliable.
	The power switch is not turned on	Turn on the power switch and confirm that the light is on.
	Electrical fault	Contact the re-seller / distributor or after-sales department.
Part falling off.	The printing platform is not leveled and zeroed in place	Do the leveling check under the guidance of after-sales personnel Increase the value of initial position if necessary.When leveling the building platform, don't crush the screen.
	The ambient temperature is too low	Place the printer in an air-conditioned room to ensure that the ambient temperature is between 25±5 ℃.
	There is foreign matter in the tank	Pour out the resin in the tank, clean the resin tank with clean alcohol / IPA, and confirm the removal of the foreign matter.
	Light path pollution	Check and clean the light path, and confirm that the bottom of the resin tank and the LCD screen are clean and bright.
	Resin and slicing package do not match	The resin is inconsistent with the resin selected during slicing. Please confirm whether it matches.
The bottom of part is peeling off.	The support is not added properly	Check the structure of the support and add enough support accordingly.
	Unreasonable design of part	The structure such as cupping and large cross-section should be avoided.
The surface of the part is coarse.	Unreasonable design of part	The structure such as cupping and large cross-section should be avoided.
	Resin and slicing package do not match	The resin is inconsistent with the resin selected during slicing. Please confirm whether it matches.
	The tank is seriously damaged	Pour out the resin in the tank, check the quality of the tank, and if it is seriously damaged, contact the dealer and purchase a new tank.
	Light path pollution	Check and clean the light path, and confirm that the bottom of the resin tank and the LCD screen are clean and bright.
The part is difficult to be shoveled from the build plate or is easily broken when being shoveled off.	Unreasonable design of part	Shell the part for printing, with a thickness of not less than 2.5mm.
	The shovel blade becomes blunt	Replace it with a new shovel blade.
Abnormal interruptio during printing.	Power off	Check the main power supply of the site.
	The part has a problem	Check whether there is a problem with the interrupted layer, e.g. a blank outline.
	Other abnormalities	Export the log of the printer and send it to the after-sales department.
The support in some area of the part is broken.	The support is not added in place	Check the structure of the support and add enough support accordingly.
	The support is too thin	Increase the diameter of the support bar.
	The tank below the area is damaged	Replace the release film or resin tank with a new one.
	The ambient temperature is too low	Place the device in an air-conditioned room to ensure that the ambient temperature is between 25±5 ℃.
Part of the printed part is missing.	Insufficient resin in the tank	Add enough resin and print it again.
	Light path pollution	Check and clean the light path, and confirm that the bottom of the resin tank and the LCD screen are clean and bright.
	The tank is damaged	Drain the resin out of the tank, check the resin tank and replace with a new one if it is damaged.
	The part is designed or supported unreasonably	Re-design the part and add support properly.
	There is foreign matter in the tank	Pour out the resin in the tank, clean the resin tank with clean IPA/ alcohol, and confirm the removal of the foreign matter.

Service

· Warranty

· Technical Support

· Contact

· Warranty Card

· FCC WARNING

Warranty

1. Warranty period

Edge Series 3D printers are provided with 12 months of warranty and lifetime maintenance services.

2. Preconditions

- The equipment failure is not caused by human reasons or force majeure.
- A valid proof of purchase.

3. Scope

- Appearance parts such as door panels and equipment case shall be deemed to be free of quality problems upon sign-off and are not included in the list of warranty components.
- Consumables (including resin tanks, release films, etc.), please unpack and inspect the goods at the signing site; upon sign-off, it shall be deemed to be free of quality problems, and the warranty request is not accepted.

4. Service

For warranty service requests which are complied with the warranty conditions, the supplier should bear the cost for spare parts, repairing and transportation as well.

5. Non-warranty circumstances

-Equipment failure caused by human reasons or force majeure;

-Failure to provide valid proof of purchase;

-The performance and reliability of the equipment is depended on many factors, and the supplier could promise that the best printing performance and reliability would be obtained if the supplier's official consumables and supporting software was used and the instructions of the equipment's user manual were complied with strictly during usage; Such warranty requests, which were caused by the application of 3rd party software and consumables, would not be accepted by the supplier definitely.

6. Warranty services

Supplier would offer maintenance service to the request which does not comply with the warranty condition or out of the warranty period, but the cost related to spare parts and transportation should be undertaken by the requester accordingly.

7. Service response

The supplier will provide online technical support to the requester within 4 hours in the time period of 09:00-17:00 on working days.

Technical support

Technical Support

If you need help during the use of RAYSHAPE products, please contact the direct seller of the products directly.

Before you initiate a technical support request via email or telephone, we recommend that you make the following preparations in advance:

1.Device SN

The product SN can help us know more details about your device and order quickly. The device SN is located on the nameplate of the body.

2.Running log file of the device

Enter the menu: TOOLS- CON FIG AND LOG FILESEXPORT THE LOG-Export, export the running log file of the device, which will be saved in the root directory of the USB disk.

3.Photos and videos

Some faults are difficult to describe and judge, and in this case, providing photos or videos is the most effective way to explain the problem.

Please provide photos or videos under following circumstances:

① Parts are damaged or fall off;

② You know the cause of the failure, but do not know the name of the relevant accessories involved in the failure;

③ The abnormal operating state of the device is complicated or difficult to describe;

④ Problems in printing quality.

Contact

For more information:

Sales Inquiries

400-0983356

sales.os@rayshape3d.com

Comments and suggestions:

feedback@rayshape3d.com

Your feedback is greatly appreciated, and your comments and suggestions will be sent to our sales, R&D, and technical support departments to help us provide better products and services.

Warranty Card

RAYSHAPE
Year Warranty

1Year Warranty Card

This warranty card, along with the valid invoice, will be guaranteed for one year after the purchase.
For the warranty details, please refer to the product user manual.

Reseller Name : _____ Invoice NO. : _____ Purchase Date: _____

Product Model : _____ Serial Number : _____ Dealer's Seal: _____

* This is lhe basic proof of lhe warranty. Please fill In II carefully and hand II over lo lhe customer for safekeeping

- -

Customer Name : _____ Contact: _____ Phone Number: _____

Address: _____ Service Evaluation: ☐Excellent ☐Good ☐Normal ☐Bad

Customer Signature : _____

FCC WARNING

FCC WARNING

This device complies with part 15 of the FCC Rules. Operation is subject to the following two conditions

(1) this device may not cause harmful interference.

(2) this device must accept any interference received, including interference that may cause undesired operation. Any changes or modications not expressly approved by the party responsible for compliance could void the user's authority to operate the equipment.

This equipment has been tested and found to comply with the limits for a Class B digital device, pursuant to Part 15 of the FCC Rules. These limits are designed to provide reasonable protection against harmful interference in a residential installation. This equipment generates, uses and can radiate radio frequency energy and, if not installed and used in accordance with the instructions,may cause harmful interference to radio communications. However,there is no guarantee that interference will not occur in a particular installation. If this equipment does cause harmful interference to radio or television reception, which can be determined by turning the equipment off and on, the user is encouraged to try to correct the interference by one or more of the following measures:

- Reorient or relocate the receiving antenna.
- Increase the separation between the equipment and receiver
- Connect the equipment into an outlet on a circuit different from that to which the receiver is connected.
- Consult the dealer or an experienced radio/TV technician for help.

To maintain compliance with FCC's RF Exposure guidelines, This equipment should be installed and operated with minimum 20cm distance between the radiator and your body: Use only the supplied antenna.